液 晶 模 组 说 明 书

LCD Module Instructions

☑初定规格 Preliminary specification

☐正式规格 Official specifications

项目编号 Project No.	TFT-H040A30 Series
产品描述 Product Description	TFT LCD Module 480(H)x 800(V) Pixels 4.0 Inch TFT LCD

客 户 确 认 签 章:
Signature by customer:

☐小批量试产 Trial Production ☐大批量生产 Mass Production

请返回一份带有您的签名和评论的确认副本

Please return one copy confirmation with signature and your comments

HotDisplay Technology Co.,Ltd

鑫洪泰科技（广东）有限公司

深圳市鑫洪泰电子科技有限公司

广东省东莞市凤岗镇东深公路凤岗段 208 号天安数码城 N3 栋 3 楼

免责声明

HotDisplay,HOTLCD 和 HOTHMI 是深圳市鑫洪泰电子科技有限公司的商标，HOTHMI 拥有多项专利、商标、商业机密和其它知识产权。

HOTHMI 对公司产品提供可靠性数据(包括数据表)、设计资料(包括参考设计)、应用 或其它设计建议、技术支持和其它资源，但不就本司任何产品用于任何特定目的做出担保。HOTHMI 不承担任何因产品的使用产生责任，包括使用方须遵守的法律法规和安全使用标准。

对于在规格书中提到的产品参数，在不同的应用条件下实际性能可能会产生变化。任何参数的配置和使用必须经由客户的技术支持进行验证，对本文档所涉及的内容进行变更，恕不另行通知。

HOTHMI 对您的使用授权仅限于产品的应用，除此之外不得复制或展示所述资源，HOTHMI 也不提供任何人或第三方机构的知识产权授权许可。如因使用所述资源而产生任何索赔、赔偿、成本、债务及任何损失，HOTHMI 对此概不负责，并且您须赔偿由此对 HOTHMI 造成的损害。

HOTHMI 所提供产品均受 HOTHMI 的销售条款以及 www.hotlcd.com 上或随附 HOTHMI 产品提供的其他可适用条款的约束。HOTHMI 提供所述资源并不扩展或以其他方式更改 HOTHMI 针对 HOTHMI 产品所发布的可适用的担保范围或担保免责声明。

HOTHMI 反对并拒绝您可能提出的任何其他或不同的条款。

Disclaimers

HotDisplay,HOTLCD and HOTHMI are trademarks of Shenzhen HOTHMI Electronic Technology Co., Ltd. and HOTHMI owns several patents, trademarks, trade secrets and other intellectual property rights.

HOTHMI provides reliability data (including data sheets), design information (including reference designs), application or other design advice, technical support and other resources for the Company's products, but does not warrant the use of any of its products for any particular purpose. HOTHMI assumes no liability arising from the use of its products, including compliance by the user with laws, regulations and standards for safe use.

For the product parameters mentioned in the specification, the actual performance may vary under different application conditions. The configuration and use of any parameter must be verified by the customer's technical support. The content of this document is subject to change without notice.

HOTHMI's license to use you is limited to the application of the product and no other reproduction or display of said resources is permitted, nor does HOTHMI provide a license to the intellectual property of any person or third party organization. HOTHMI shall not be liable for any claims, damages, costs, liabilities and any losses arising out of the use of said resources and you shall indemnify HOTHMI for any damage caused thereby.

HOTHMI offers its products subject to HOTHMI's Terms of Sale and other applicable terms provided on or with HOTHMI products at www.hotlcd.com. HOTHMI provides the resources described and does not extend or otherwise modify the scope of applicable warranties or warranty disclaimers issued by HOTHMI with respect to HOTHMI products.

HOTHMI objects to and rejects any other or different terms that you may offer.

内容
substance

一、基本特征 General Feature……4
二、外形尺寸 Outline Dimensions……5
三、引脚说明 Pin Description……6
四、电气特性 Electrical Characteristics……11
五、液晶光学规格 TFT OPTICAL SPECIFICATION……14
六、交流特性 AC characteristic……16
七、可靠性测试 RELIABILITY TEST……21
八、处理和注意事项 HANDDLING & CAUTIONS……23
九、初始化代码 Initialization code……25

一、基本特征 General Feature:

项目 Item	标准值 Standard Value			单位 Unit
TFT 显示尺寸 TFT Display Size	4.0			英寸 Inch
TFT 分辨率 TFT Number of Pixels	480(RGB) (H) x 800 (V)			像素 Pixel
TFT 显示有效区域 TFT Display Active Area	51.84 (H) x 86.40 (V)			毫米 mm
TFT 模组外形尺寸 TFT Module Dimensions	57.14 (H) x 96.85 (V) x 2.35 (D) <TFT>			毫米 mm
TFT 观看方向 TFT Viewing Direction	U80/D80/R80/L80 (Typ.)			度数 Deg.
TFT 模组接口 TFT Module Interfaces	Support: RGB interface <24 bit>			—
TFT 驱动芯片 TFT Driver IC	— — —			—
电容触摸屏驱动芯片 CTP Driver IC	— — —			—
触摸屏 Touch Panel	☑不带触摸屏 No TP	☐带触摸屏 Have TP	☐带玻璃盖板 Have Glass cover	—
TFT 模组重量 TFT Module Weight	不带触摸屏 Without TP	T.B.D ±5%		克 g
	带电容触摸屏 With CTP	T.B.D ±5%		
	带电阻触摸屏 With RTP	T.B.D ±5%		

说明 Description:

二、外形尺寸 Outline Dimensions

TFT-H040A30WVIST1N40_V0-0 <NO TP_100cd/m²_RGB 接口>

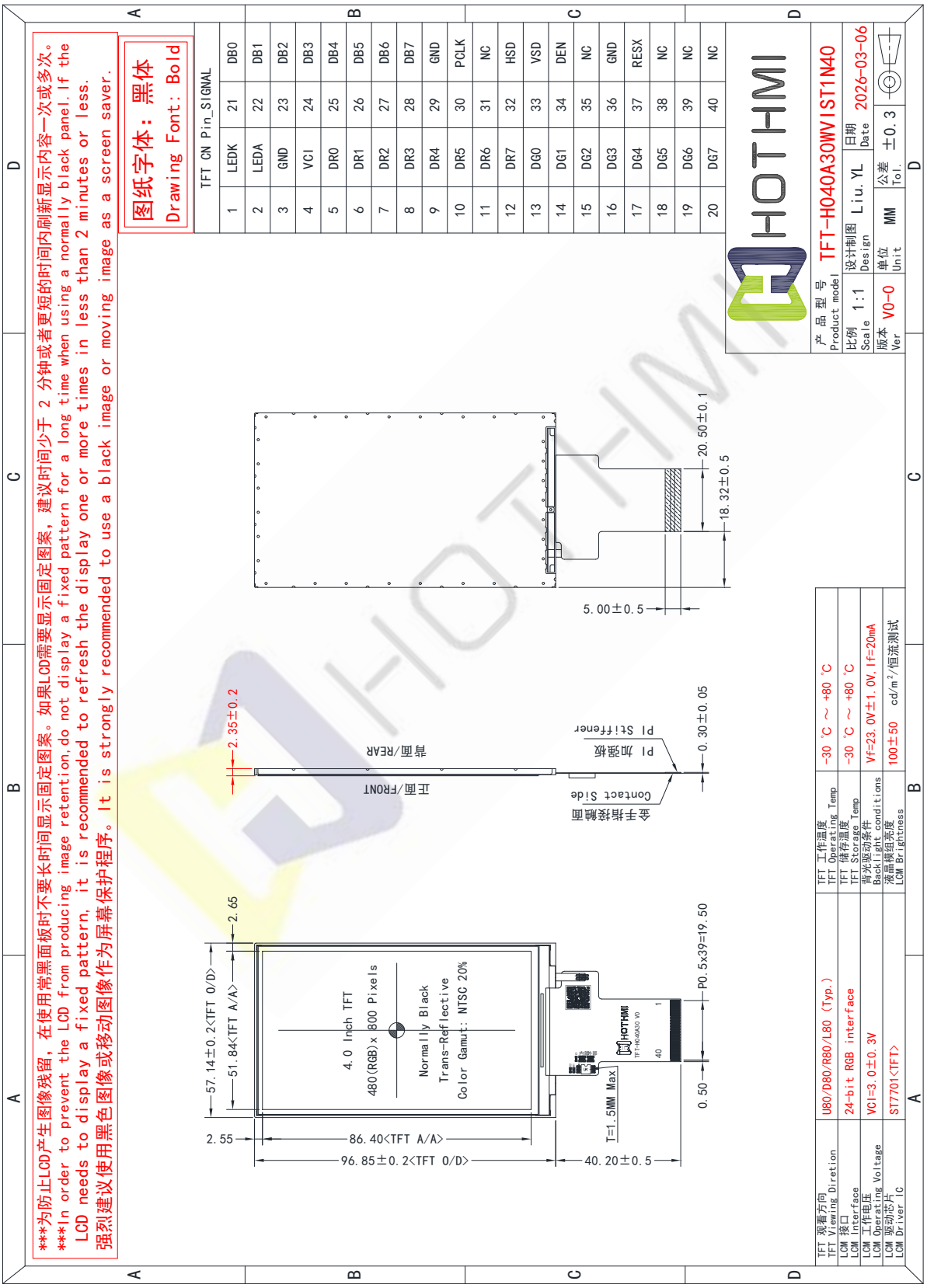

www.hotlcd.com 优质源于专业 EXCELLENT QUALITY BASED ON PROFESSION

三、引脚说明 Pin Description

3.1 模组引脚说明 TFT Pin Description

引脚编号 Pin NO.	标号 Symbol	详细描述 Description
1	LEDK	LED阴极 LED cathode
2	LEDA	LED阳极 LED anode
3	GND	电源地 Power supply ground
4	VCI	电源 Power supply
5～12	DR0～7	红色数据总线。 Red data bus.
13～20	DG0～7	绿色数据总线。 Green data bus.
21～28	DB0～7	蓝色数据总线。 Blue data bus.
29	GND	电源地 Power supply ground
30	PCLK	像素时钟输入引脚 Pixel clock input pin
31	NC	不连接 Not connected
32	HSD	水平同步信号，默认为负极性。 Horizontal sync signal, default is negative polarity.
33	VSD	垂直同步信号，默认为负极性。 Vertical sync signal, default is negative polarity.
34	DEN	数据输入启用。当DE为 "H "时，显示访问被启用。 Data input enable. Display access is enabled when DE is “H”.
35	NC	不连接 Not connected
36	GND	电源地 Power supply ground
- 下一页 - -Next page -		

引脚编号 Pin NO.	标号 Symbol	详细描述 Description
37	RESX	TFT 复位信号 TFT Reset signal
38	NC	不连接 Not connected
39	NC	不连接 Not connected
40	NC	不连接 Not connected
- 结束 - - END -		

3.2 电容触摸引脚说明 CTP Pin Description

引脚编号 Pin NO.	标号 Symbol	详细描述 Description
1	NC	不连接 Not connected
2	NC	不连接 Not connected
3	NC	不连接 Not connected
4	NC	不连接 Not connected
5	NC	不连接 Not connected
6	NC	不连接 Not connected
- 结束 - - END -		

3.4 参考电路图 Reference Circuit Diagram

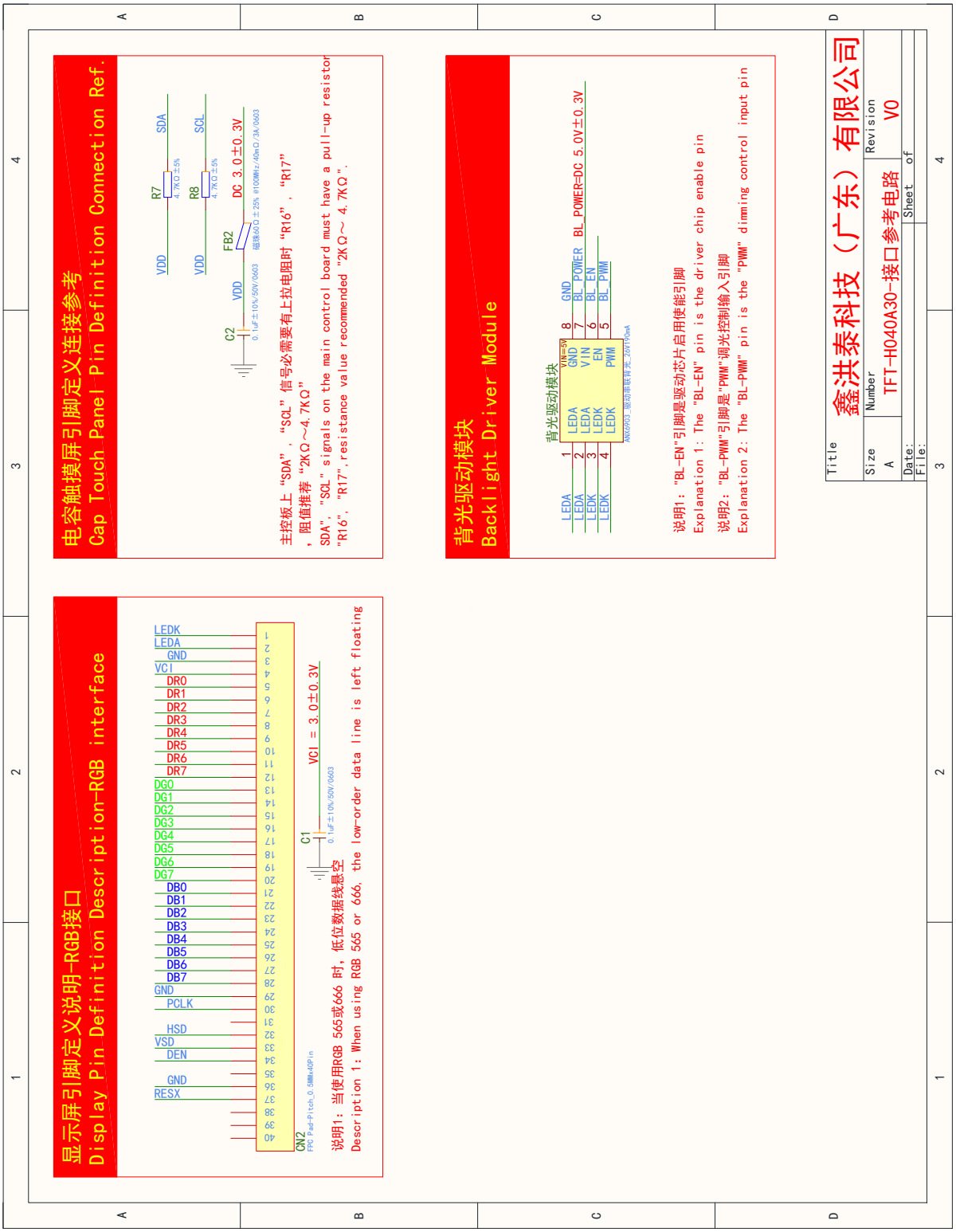

说明 1：为了方便调试，我司可以提供配套的驱动模块

Note 1: In order to facilitate debugging,our company can provide matching drive Module

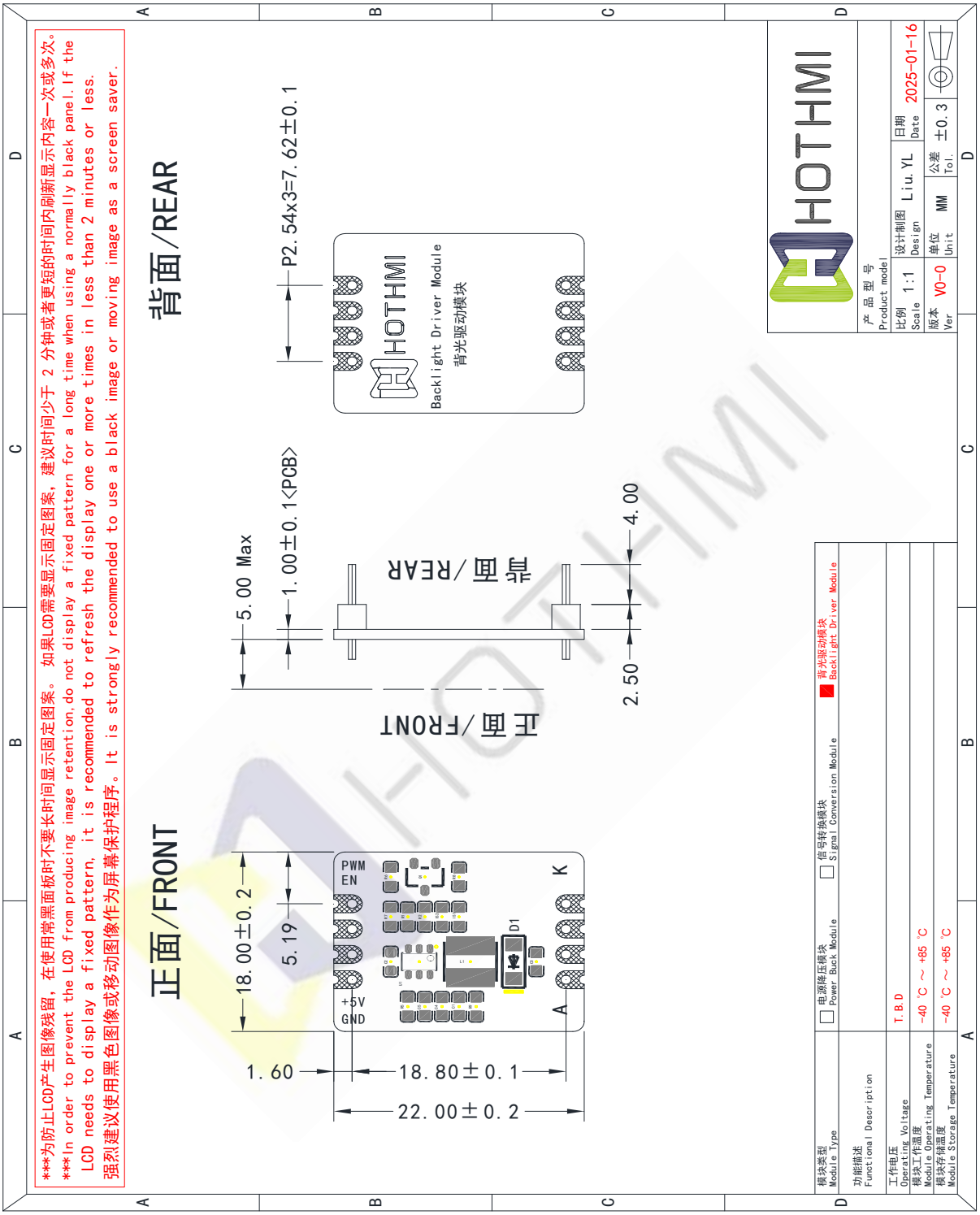

背光模块尺寸 Backlight Module Dimensions

说明 1：我司所有背光模块长，宽尺寸相同，引脚定义相同。使用的模块以实物为准.

Note 1: All of our backlight modules have the same length and width dimensions and the same pin definition.Modules used are subject to physical.

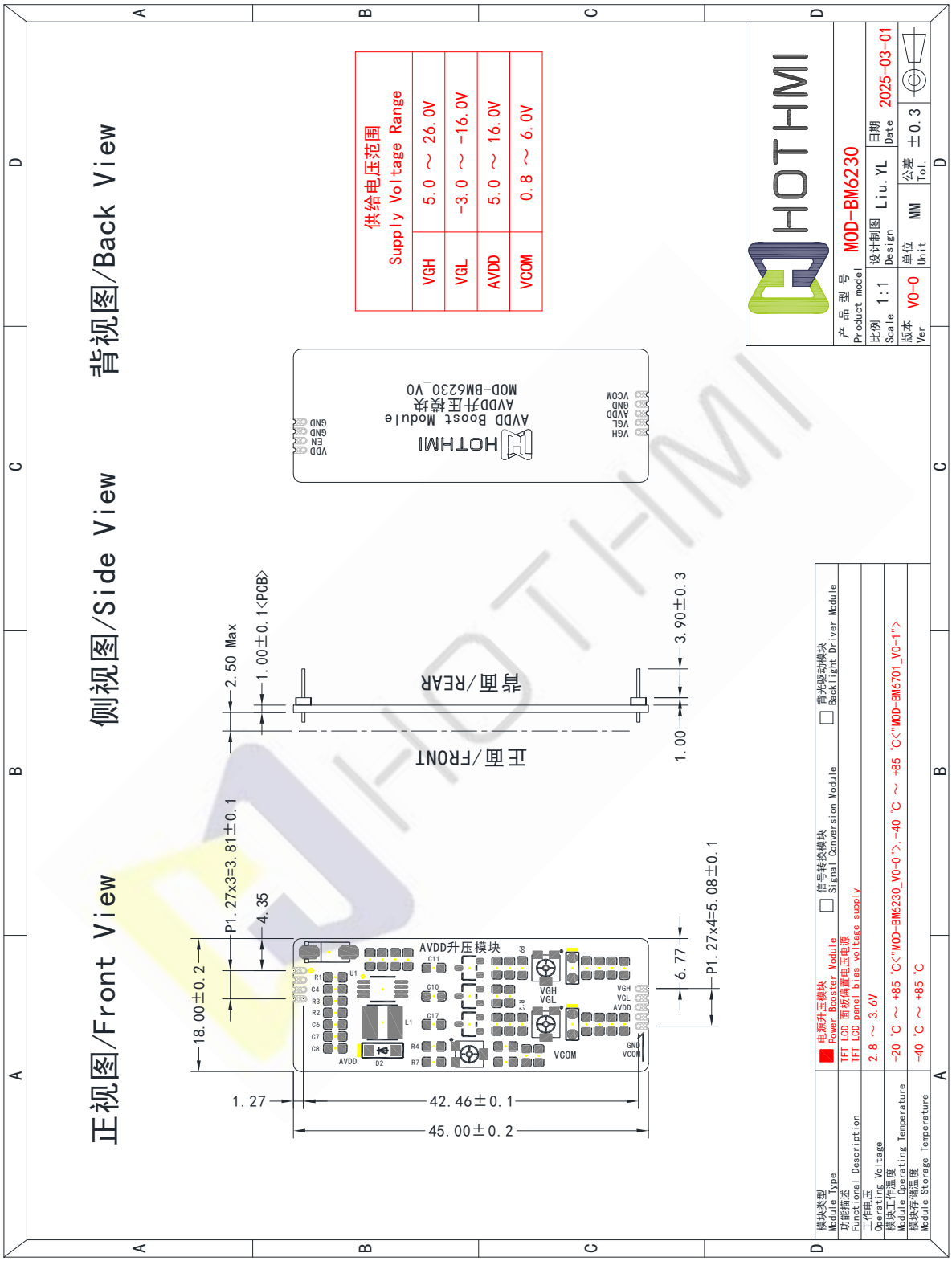

AVDD 升压模块尺寸

AVDD Boost Module Dimensions

四、电气特性 Electrical Characteristics

4-1 TFT 模组工作条件 TFT LCD Module Operating Conditions

项目 Item	标号 Symbol	条件 Condition	最小值 Min	典型值 Type	最大值 Max	单位 Unit
数字电源 Digital Power	VCI	-	Type -0.3	3.0	Type +0.3	伏 V
接口工作电压 IO Supply Voltage	IOVCC	-	Type -0.1	-	Type +0.1	伏 V
模拟电路电源 Power For Analog	AVDD	-	Type -0.3	-	Type +0.3	伏 V
TFT 栅极导通电压 TFT Gate ON Voltage	VGH	-	Type -1.0	-	Type +1.0	伏 V
TFT 栅极关断电压 TFT Gate OFF Voltage	VGL	-	Type -1.0	-	Type +1.0	伏 V
TFT 公共电极电压 TFT Common Electrode Voltage	VCOM	-	Type -0.5	-	Type +0.5	伏 V
工作电流 Operation Current	Ioc	-	-	-	-	毫安 mA
待机电流 Standby Current	Isc	-	-	-	-	微安 uA
TFT 工作温度 TFT Operating Temp	TOPR	-	-30	+25	+80	摄氏度 ℃
TFT 储存温度 TFT Storage Temp	TSTG	-	-30	+25	+80	摄氏度 ℃

备注 Notes：

1. VGH 为 TFT 栅极工作电压。VGH is TFT Gate operating voltage.
2. VGL 为 TFT 栅极工作电压。VGL 信号的低电平必须与 Vcom 同相波动。
   VGL is TFT Gate operating voltage. The low voltage level of VGL signal must be fluctuates with same phase as Vcom.
3. 必须调节 Vcom 以优化显示质量，如串扰和对比度等。
   Vcom must be adjusted to optimize display quality, as Crosstalk and Contrast Ratio etc.
4. 该值只是参考值。客户可通过不同的 D-IC 优化设置值。
   The value is just the reference value. The customer can optimize the setting value by the different D-IC.

4-2 背光工作条件 LED back light specification

背光-1 <背光冷色调/Backlit cool tone>

项目 Item	标号 Symbol	条件 Condition	最小值 Min	典型值 Type	最大值 Max	单位 Unit
工作电压 Forward voltage	VF	恒流 constant current	Type -1.0	23	Type +1.0	伏特 V
工作电流 Forward current	IF		-	20	-	毫安 mA
亮度（带 LCD） Luminance(With LCD)	Lv	不带触摸 No TP	Type -50	110	Type +50	坎德拉/平方米 cd/m²
		带电容触摸屏 Have CTP		100		
		带电阻触摸屏 Have RTP		90		
LED 寿命 LED life time	Hr	Ta=25±3 ℃	20,000	30,000	-	小时 Hour

不带触摸 No TP

带电容触摸屏 Have CTP

注释 Note:

1. LED 寿命（Hr）定义为在 Ta=25±3 ℃,上表所示的典型电压电流值条件下持续工作直至亮度低于 50% 的时间。

LED life time (Hr) can be defined as the time in which it continues to operate under the condition:Ta=25±3 ℃, typical IL value indicated in the above table until the brightness becomes less than 50%.

2. 以上结果是按 MTBF 計算方式预估判定的 LED 失效时间，实际测试 LED 在 Ta=25±3 ℃点亮 5000H，亮度衰减 8%.

The above results are estimated and judged by the MTBF calculation method of the LED failure time. The actual test LED is lit for 5000H at Ta=25±3 ℃, and the brightness decays by 8%.

4-3 电容触摸屏工作条件 CTP Operating Conditions

项目 Item	标号 Symbol	条件 Condition	最小值 Min	典型值 Type	最大值 Max	单位 Unit
表面硬度 Surface hardness	-	铅笔 Pencil	-	6H	-	硬度 Hard
有效数据数 No. of valid data	-	-	-	-	5	点 Point
透光率 Transmittance	-	-	80	-	-	百分比 %
数字电源 Digital Power	VDD	-	Type -0.3	3.0	Type +0.3	伏特 V
I/O 电源 I/O Power	IOVDD	-	Type -0.3	3.0	Type +0.3	伏特 V
工作温度 Operation Temperature	-	20%-90%RH;	-20	+25	+70	摄氏度 ℃
储存温度 Storage Temperature	-		-30	+25	+80	摄氏度 ℃

五、液晶光学规格 TFT OPTICAL SPECIFICATION

5.1 概述 Overview

光学规格的测试应在暗室（环境亮度 1lux，温度=25 2℃）中使用亮度计系统（测角仪系统和TOPCON BM-5)设备进行测量,测试单元应位于大约 在 θ 和 Φ 等于 0 的视角下,距 LCD 表面 50cm 的距离。 显示面上测量点的中心应保持固定。 测量前背光应工作 30 分钟。

The test of Optical specifications shall be measured in a dark room (ambient luminance 1lux and temperature = 25 2℃) with the equipment of Luminance meter system (Goniometer system and TOPCON BM-5) and test unit shall be located at an approximate distance 50cm from the LCD surface at a viewing angle of θ and Φ equal to 0 . The center of the measuring spot on the Display surface shall stay fixed. The backlight should be operating for 30 minutes prior to measurement.

5.2 光学规格 Optical Specifications

参数 Parameter		标号 Symbol	条件 Condition	最小值 Min.	典型值 Typ.	最大值 Max.	单位 Unit	备注 Remark
视角范围 Viewing Angle Range	水平 Horizontal	Θ左/L	CR>10	-	80	-	Deg.	Note 1
		Θ右/R		-	80	-	Deg.	
	垂直 Vertical	Θ上/U		-	80	-	Deg.	
		Θ下/D		-	80	-	Deg.	
对比度 Contrast ratio		CR	Θ = 0°	-	-	-	-	Note2
色域 Color Gamut		CG	CIE1931	-	-	-	%	
白色色度 White Chromaticity		Wx	Θ = 0°	-0.03	-	+0.03	-	Note4 (Based on C Light)
		Wy			-		-	
色彩还原 Reproduction of color	红 Red	Rx			-		-	
		Ry			-		-	
	绿 Green	Gx			-		-	
		Gy			-		-	
	蓝 Blue	Bx			-		-	
		By			-		-	
响应时间（上升 + 下降） Response Time (Rising + Falling)		Tr＋Tf	Θ = 0° Ta= 25℃	-	35	45	ms	Note5

注释 Note:

1. 视角是对比度大于10的角度。视角确定为相对于光轴的水平或3、9点钟方向和垂直或6、12点钟方向 垂直于 LCD 表面（见图 1）。

Viewing angle is the angle at which the contrast ratio is greater than 10. The viewing angles are determined for the horizontal or 3, 9 o' clock direction and the vertical or 6, 12 o' clock direction with respect to the optical axis which is normal to the LCD surface (see FIGURE 1).

2. 对比度测量应在 θ= 0 的视角和 LCD 表面的中心进行。 亮度测量时，视场中的所有像素首先设置为白色，然后设置为暗（黑色）状态。（参见图 1）亮度对比度（CR）是通过数学定义的。

Contrast measurements shall be made at viewing angle of Θ= 0 and at the center of the LCD surface. Luminance shall be measured with all pixels in the view field set first to white, then to the dark (black) state . (see FIGUR 1) Luminance Contrast Ratio (CR) is defined mathematically.

$$CR = \frac{\text{Luminance when displaying a white raster}}{\text{Luminance when displaying a black raster}}$$

3. 透射率是没有 APF 和没有 CG 的值。

Transmittance is the Value without APF and without CG.

4. 上表中规定的色度坐标应由所有像素首先测量的光谱数据计算为红色、绿色、蓝色和白色。 测量应在面板的中心进行。

The color chromaticity coordinates specified in the above table shall be calculated from the spectral data measured with all pixels first in red, green, blue and white. Measurements shall be made at the center of the panel.

5. 电光响应时间测量应如图 2 所示，通过打开和关闭“数据”输入信号来进行。 亮度从10%变化到90%所需的时间是Tr，90%到10%是Tf。

The electro-optical response time measurements shall be made as FIGURE 2 by switching the “data” input signal ON and OFF. The times needed for the luminance to change from 10% to 90% is Tr, and 90% to 10% is Tf.

Figure1 Measurement Set Up

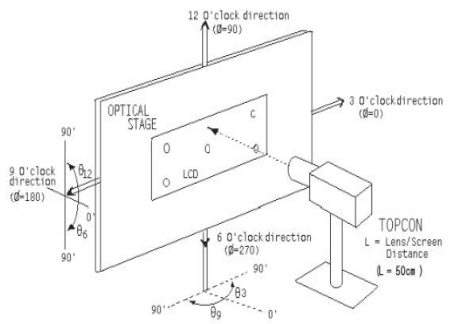

图 1

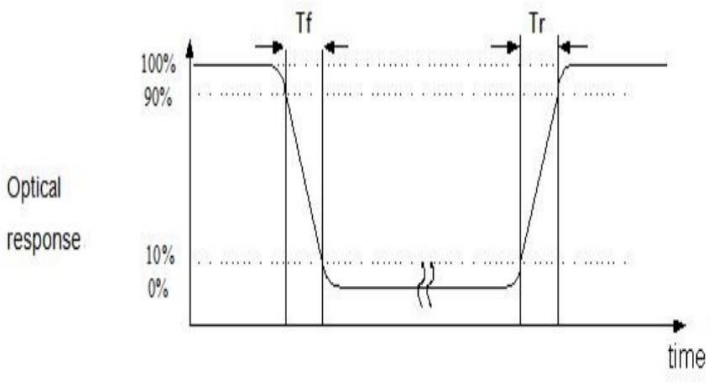

图 2

六、交流特性 AC characteristic

6.1. DPI（RGB）接口模式时序图 Timing diagram of DPI (RGB) interface mode

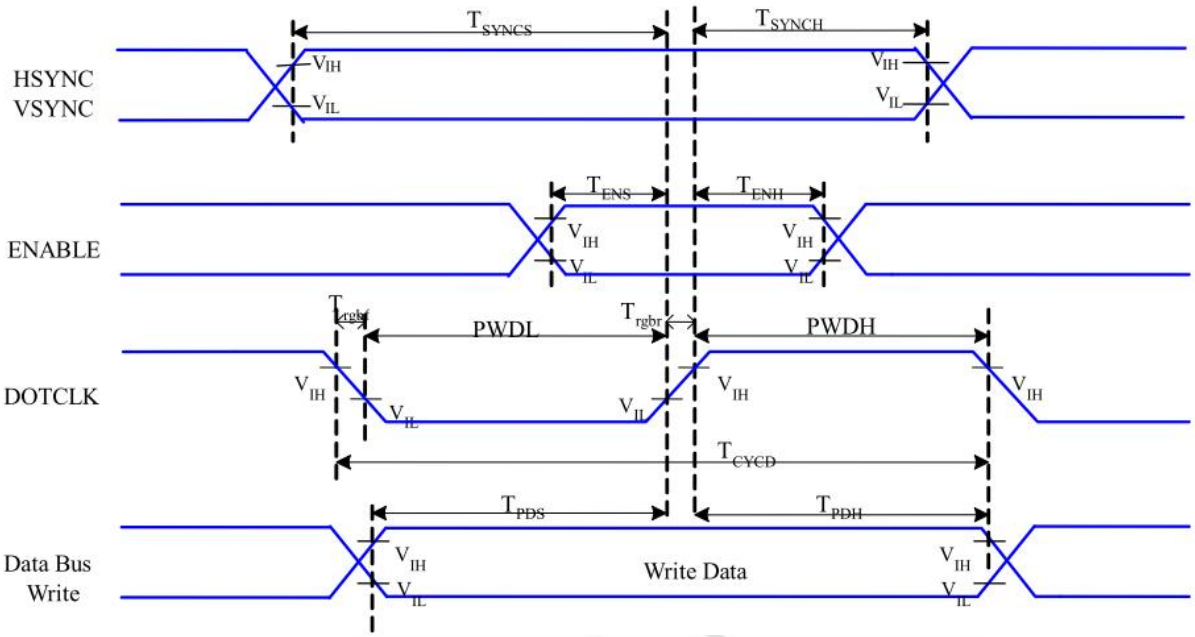

Signal	Symbol	Parameter	MIN	MAX	Unit	Description
HSYNC, VSYNC	T_{SYNCS}	VSYNC, HSYNC Setup Time	5	-	ns	
ENABLE	T_{ENS}	Enable Setup Time	5	-	ns	
	T_{ENH}	Enable Hold Time	5	-	ns	
DOTCLK	PWDH	DOTCLK High-level Pulse Width	15	-	ns	
	PWDL	DOTCLK Low-level Pulse Width	15	-	ns	
	T_{CYCD}	DOTCLK Cycle Time	33	-	ns	
	Trghr, Trghf	DOTCLK Rise/Fall time	-	15	ns	
DB	T_{PDS}	PD Data Setup Time	5	-	ns	
	T_{PDH}	PD Data Hold Time	5	-	ns	

6.2. 复位时序 Reset Timing

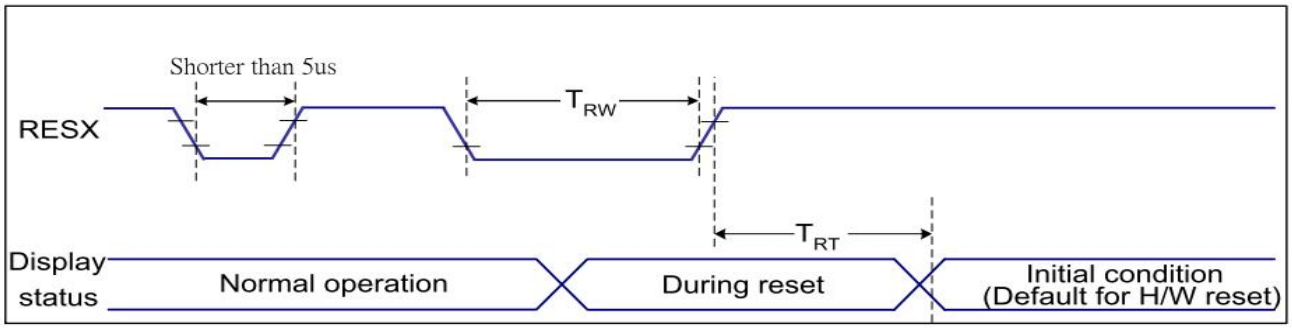

Reset Timing Characteristics IOVCC=1.65~1.95v Ta=25℃

Parameter	Symbol	Specification			Unit
		Min.	Typ.	Max.	
Reset low width	Trst_width	1	-	-	ms
Reset time	Trst_time	120	-	-	ms
OP noise reject	Trst_op_nrj	-	-	10	us

注释 Notes:

1. 复位取消还包括将 ID 字节、VCOM 设置和其他设置从 NVM（或类似设备）加载到寄存器所需的时间。 每次在 RESX 上升沿后 5 ms 内有硬件复位取消时间（tRT）时，都会执行此加载。

The reset cancel includes also required time for loading ID bytes, VCOM setting and other settings from NVM (or similar device) to registers. This loading is done every time when there is HW reset cancel time (tRT) within 5 ms after a rising edge of RESX.

2. 根据下表，由于 RESX 线路上的静电放电引起的尖峰不会导致不规则的系统复位

Spike due to an electrostatic discharge on RESX line does not cause irregular system reset according to the table below:

RESX Pulse	Action
Shorter than 5us	Reset Rejected
Longer than 9us	Reset
Between 5us and 9us	Reset starts

3. 在复位期间，显示屏将被消隐（显示屏进入消隐序列，最长持续时间为 120 毫秒，此时 Reset Starts in Sleep Out －mode。显示屏在 Sleep In －mode 中保持消隐状态。）然后返

回 硬件复位的默认条件。

4. During the Resetting period, the display will be blanked (The display is entering blanking sequence, which maximum time is 120 ms, when Reset Starts in Sleep Out –mode. The display remains the blank state in Sleep In –mode.) and then return to Default condition for Hardware Reset.

4. 尖峰抑制也适用于有效复位脉冲期间，如下所示：

Spike Rejection also applies during a valid reset pulse as shown below:

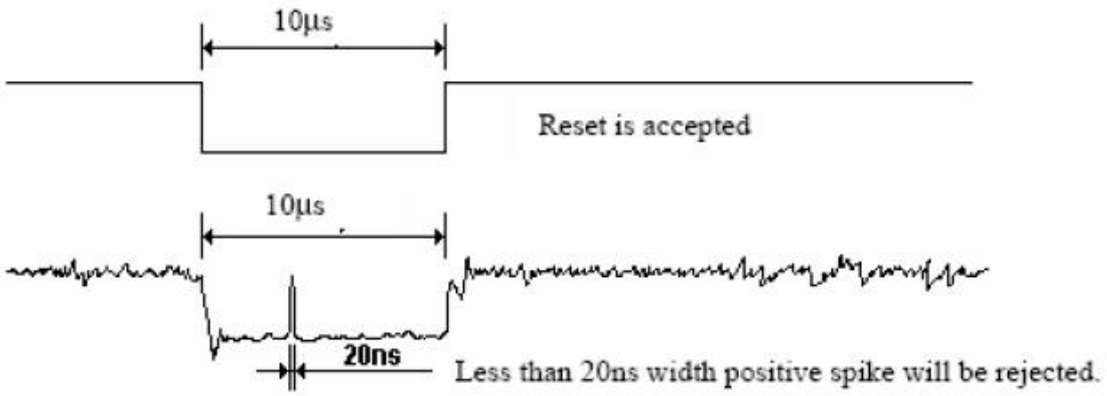

5. 在进入睡眠期间应用复位时

When Reset applied during Sleep In Mode.

6. 在退出睡眠期间应用复位时

When Reset applied during Sleep Out Mode.

7. 释放 RESX 后需要等待 5 毫秒以上才能发送命令。也不能在 120 毫秒内发送睡眠退出命令。

It is necessary to wait 5msec after releasing RESX before sending commands. Also Sleep Out command cannot be sent for 120msec.

6.3. 电源开启/关闭顺序 Power On/Off Sequence

IOVCC 和 VCI 可以按任何顺序应用或断电。 在关机序列期间，如果 LCD 处于休眠模式，则 VCI 和 IOVCC 必须在至少 120 毫秒内断电。 如果 LCD 处于休眠模式，VCI 和 IOVCC 可以在 RESX 释放后至少 0 毫秒内断电。 CSX 可以在任何时间应用，也可以永久接地。 RESX 的优先级高于 CSX。

IOVCC and VCI can be applied or powered down in any order. During the Power Off sequence, if the LCD is in the Sleep Out mode, VCI and IOVCC must be powered down with minimum 120msec. If the LCD is in the Sleep In mode, VCI and IOVCC can be powered down with minimum 0msec after the RESX is released. CSX can be applied at any timing or can be permanently grounded. RESX has high priority over CSX.

备注 Notes:

1. 如果不满足电源顺序，TFT 不会损坏。

   TFT will not be damaged if the power sequence is not met.

2. 在电源开/关序列期间，显示面板上不会有异常的可见效果。

   There will be no abnormal visible effects on the display panel during the Power On/Off Sequences.

3. 在 Power On Sequence 结束和收到 Sleep Out 命令之前，以及在收到 Sleep In 命令和 Power Off Sequence 之间，显示屏上不会出现异常可见的效果。

   There will be no abnormal visible effects on the display between the end of Power On Sequence and before receiving the Sleep Out command, and also between receiving the Sleep In command and the Power Off Sequence.

4. 如果在第 6.4.1 节中定义的开机序列期间主机没有稳定地保持 RESX 线，则有必要在主机开机序列完成后应用硬件复位（RESX）以确保 正确的操作。 否则，无法保证所有功能。

   If the RESX line is not steadily held by the host during the Power On Sequence as defined in Sections 6.4.1, then it will be necessary to apply the Hardware Reset (RESX) after the completion of the Host Power On Sequence to ensure correct operations. Otherwise, all the functions are not guaranteed.

6.3.1. 不受控制的断电 Uncontrolled Power Off

非受控断电是指在没有受控断电序列的情况下取出电池的情况。 它不会损坏模块或主机接口。

The uncontrolled power-off means a situation which removed a battery without the controlled power off sequence. It will neither damage the module or the host interface.

如果发生不受控制的断电，显示屏将变为空白，显示屏上不会有任何可见效果（空白显示）并保持空白，直到“Power On Sequence”启动它。

If uncontrolled power-off happened, the display will go blank and there will not any visible effect on the display (blank display) and remains blank until “Power On Sequence” powers it up.

电源开/关顺序如下图所示

The power on/off sequence is illustrated below

Power On Sequence

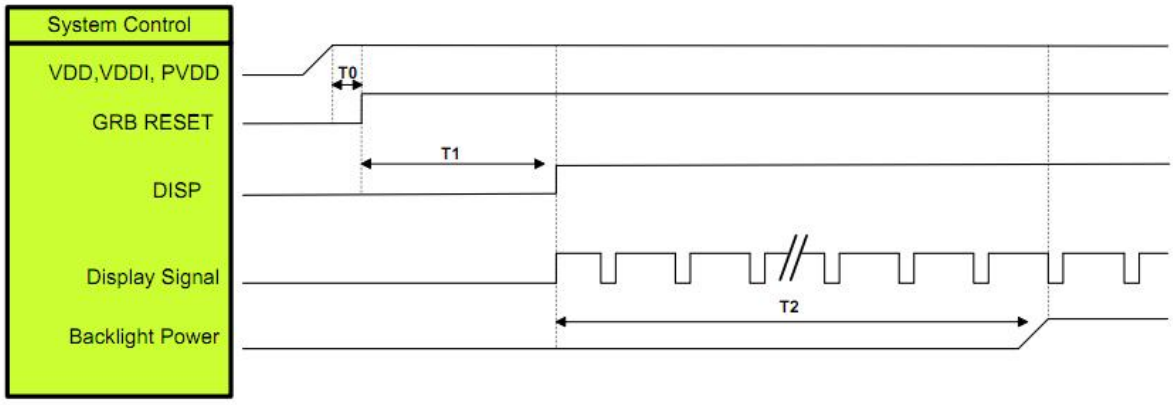

Symbol	Description	Min. Time	Unit
T0	System power stability to GRB RESET signal	0	ms
T1	GRB RESET= “High” to DISP=”High”	10	ms
T2	Display Signal output to Backlight Power on	250	ms

Note: Display signal: DCLK; VSYNC; HSYNC; DE; DR[7:0]; DG[7:0]; DB[7:0]

Power Off Sequence

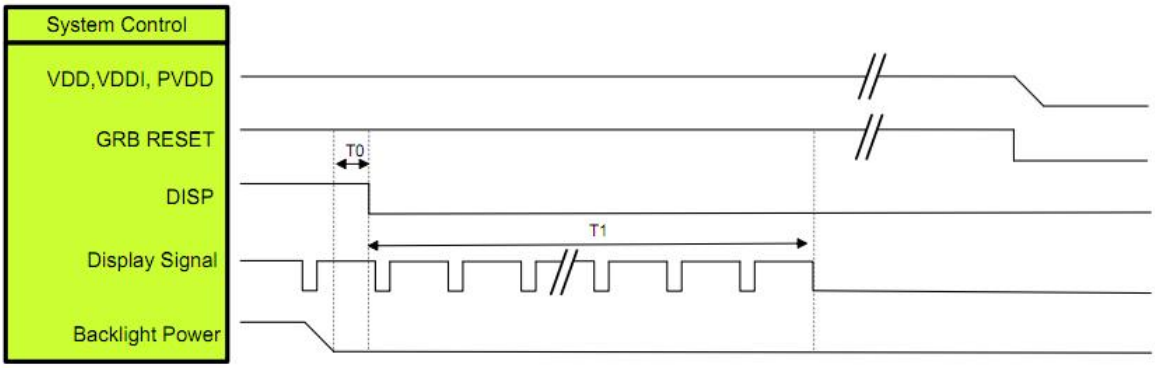

Symbol	Description	Min. Time	Unit
T0	Backlight Power off to DISP=”Low”	5	ms
T1	DISP=”Low” to IC internal voltage discharge complete	80	ms

Note: Display signal: DCLK; VSYNC; HSYNC; DE; DR[7:0]; DG[7:0]; DB[7:0]

七、可靠性测试 RELIABILITY TEST

7-1 温度和湿度 Temperature and Humidity

测试项目 TEST ITEMS	条件 CONDITIONS	注释 NOTE
高温储存 High Temperature Storage	Ta=+80 ℃, 120hrs	
低温储存 Low Temperature Storage	Ta=-30 ℃, 120hrs	
高温运行试验 High Temperature Operation	Ta=+80 ℃, 120hrs	
低温运行试验 Low Temperature Operation	Ta=-30 ℃, 120hrs	
高温高湿（运行测试） High Temperature and High Humidity (Operating)	Ta=+60 ℃, 90%RH, 120hrs	

注释 Note:

1. 液晶驱动电压。由于液晶材料的特性，该电压随环境温度而变化。

Liquid Crystal driving voltage。Due to the characteristics of LC Material, this voltage varies with environmental temperature.

2. 温度和相对湿度范围如下图所示。湿球温度最高应为39℃。并且没有冷凝水。

Temperature and relative humidity range are shown in the figure below.Wet bulb temperature should be 39 ℃ max. and no condensation of water.

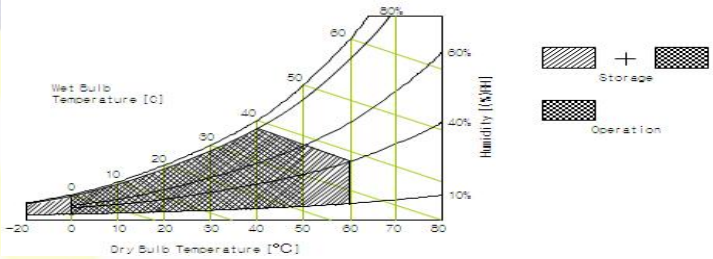

3. 产品经可靠性测试后，仅保证功能正常，无任何致命缺陷（不显示、线路缺陷、显示异常等）。

After the reliability test, the product only guarantee function normally without any fatal defect(non-display, line defect, abormal display etc).

4. 所有显示判断均在面板温度恢复到室温2小时后进行

All display judgments are made after the panel temperature returns to room temperature for 2 hours

5. Ta：环境温度

Ta：Ambient temperature

7-2 冲击和振动 Shock and Vibration

测试项目 TEST ITEMS	条件 CONDITIONS
包装冲击(非操作) Packing Shock (Non-Operation)	● Shock level:980m/s^2 ● Waveform:1/2 Sine wave,6msec ● ±X, ±Y ±Z,each axis 1 times
包装振动(非操作) Packing Vibration (Non-Operation)	● Frequency range:8-33.3HZ ● Stoke:1.0mm ● Sweep: 10Hz-50Hz ● x,y,z 2 hours for each direction

7-3 静电放电测试 Electrostatic Discharge

测试项目 TEST ITEMS	条件 CONDITIONS
ESD (Non-operation)	150pF,330Ω, Contact±4KV,Air :±8KV.Note 1
	200pF,0Ω, ±200V Contact test.Note 2

测量点 Measure Point:

1. LCD玻璃和金属边框
   LCD glass and metal bezel
2. 连接器引脚
   IF connector pins

八、处理和注意事项 HANDDLING & CAUTIONS

8-1 操作注意事项 Caution For Operation

♦由于液晶模组是玻璃材质，请勿对其施加强烈的机械冲击或静载荷。请小心搬运，因为冲击、振动和粗心的搬运可能会严重影响产品。如果从高处坠落或受到强烈冲击 ，玻璃可能碎了。

Since the LCM is made of glass, do not apply strong mechanical impact or static load onto it.Handling with care since shock, vibration, and careless handling may seriously affect the product.If it falls from a high place or receives a strong shock, the glass maybe broken.

♦在规定的电压限制内驱动 LCM 是必不可少的，因为高于限制的电压会导致 LCM 的寿命缩短。 由直流引起的电化学反应会导致 LCM 出现不良劣化，因此应避免使用直流驱动。

It is indispensable to drive the LCM within the specified voltage limit since the higher voltage than the limit causes LCM's life shorter. An electro-chemical reaction due to DC causes undesirable deterioration of the LCM so that the use of DC drive should avoid.

♦请勿在电源开启时将 LCM 连接到系统或从系统断开连接。

Do not connect or disconnect the LCM to or from the system when power is on.

♦切勿在高温高湿的异常条件下使用 LCM。

Never use the LCM under abnormal conditions of high temperature and high humidity.

♦当暴露于剧烈的温度波动（热到冷或冷到热）时，LCM可能会受到影响； 具体来说，从冷到热的剧烈温度波动会在 LCM 表面产生露水，这可能会影响 LCM 上偏振片的运行。

When expose to drastic fluctuation of temperature(hot to cold or cold to hot), the LCM may be affected; specifically, drastic temperature fluctuation from cold to hot, produces dew on the LCM's surface which may affect the operation of the polarizer on the LCM.

♦在低于工作温度范围的温度下，响应时间将极度延迟，另一方面，在高于其工作范围的温度下，LCM 可能会变黑。 然而，这些现象并不意味着 LCM 出现故障或故障。 一旦温度恢复到正常运行的推荐温度范围，LCM 将恢复正常运行。

Response time will be extremely delay at lower temperature than the operating temperature range and on the other hand LCM may turn black at temperature above its operational range. However those phenomenon do not mean malfunction or out of order with the LCM. The LCM will revert to normal operation once the temperature returns to the recommended temperature range for normal operation.

♦为防止LCD产生图像残留，在使用常黑面板时不要长时间显示固定图案。 如果LCD需要显示固定图案，建议时间少于 2 分钟或者更短的时间内刷新显示内容一次或多次。强烈建议使用黑色图像或移动图像作为屏幕保护程序。

In order to prevent the LCD from producing image retention, do not display a fixed pattern for a long time when using a normally black panel. If the LCD needs to display a fixed pattern, it is recommended to refresh the display one or more times in less

than 2 minutes or less. It is strongly recommended to use a black image or moving image as a screen saver.

♦强烈的光照会导致 LCD 偏光片和彩色滤光片退化。 不准在强光或高温高湿下长期存放或直接运行。

Strong sunlight can cause LCD polarizers and color filters to degrade. Long-term storage or direct operation under strong light or high temperature and humidity is not allowed.

8-2 防静电措施 Caution Against Static Charge

♦LCM 使用 C-MOS LSI 驱动器，因此建议客户将任何未使用的输入端连接到 Vdd 或 Vss，上电前不要输入任何信号，并将您的身体、工作/装配区、装配设备接地 防止静电。

The LCM use C-MOS LSI drivers, so customers are recommended that any unused input terminal would be connected to Vdd or Vss, do not input any signals before power is turn on, and ground you body, work/assembly area, assembly equipments to protect against static electricity.

♦缓慢去除保护膜，保持去除方向与面板表面不垂直约 30 度，如有可能，在离子风机等 ESD 控制装置下，工作室内湿度应保持在 50%RH 以上，以减少静电风险

Remove the protective film slowly, keeping the removing direction approximate 30-degree not vertical from panel surface, if possible, under ESD control device like ion blower, and the humidity of working room should be kept over 50%RH to reduce the risk of static charge.

♦避免使用合成纤维制成的工作服。 我们推荐棉质衣服或其他经过导电处理的纤维。

Avoid the use work clothing made of synthetic fibers. We recommend cotton clothing or other conductivity-treated fibers.

♦在处理 LCM 时，请戴上不带电材料的手套。 对地导电手腕和对地导电鞋是必需的

In handling the LCM, wear non-charged material gloves. And the conducting wrist to the earth and the conducting shoes to the earth are necessary

九、初始化代码 Initialisation code

说明：这些参数值仅供参考，可能并不完全适用于所有软件平台，请根据您使用的平台优化参数。

Description : These parameter values are for reference only and may not be fully applicable to all software platforms, please optimise the parameters according to the platform you are using.

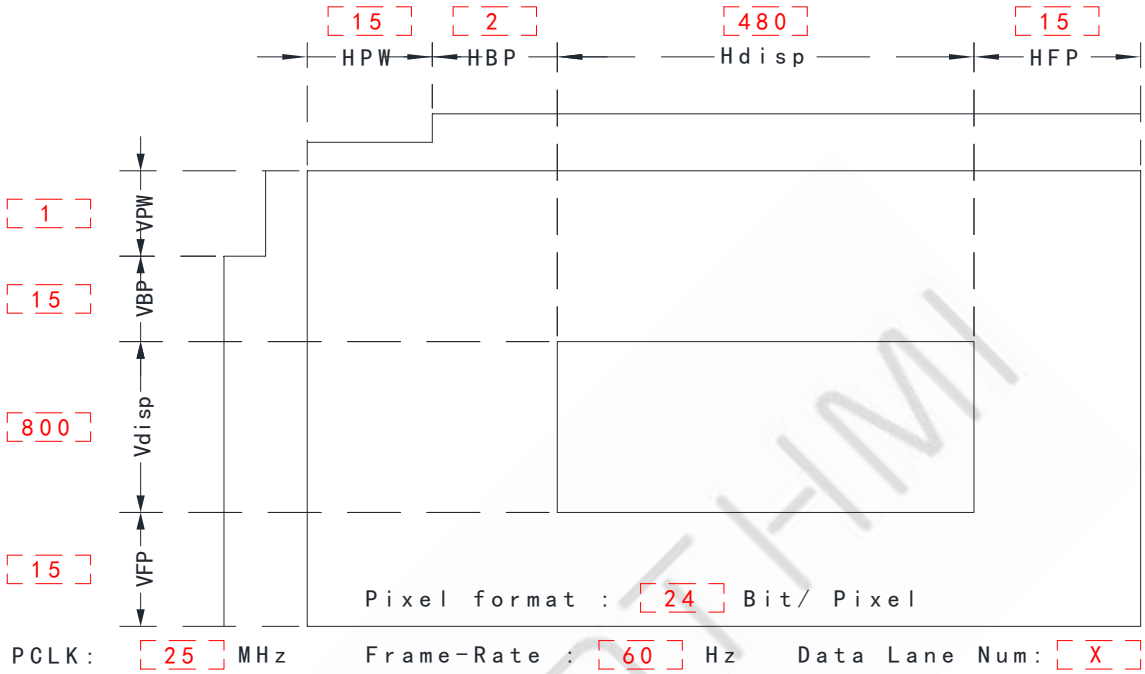


```
Void Panel_Initial_code(void)
{
//================上电复位操作===============//
LCD_RESET=1;
Delayms(1);          //Delay 1ms
LCD_RESET=0;
Delayms(10);          //Delay 10ms
LCD_RESET=1;
Delayms(120);         //Delay 120ms
//=============================================//
//RGB 初始化代码已内置 RGB The initialization code has been built-in

WriteComm(0x11);
Delay_ms(250);
WriteComm(0x29);
Delay_ms(100);
}
```

MIPI 代码格式说明 Code Format Description

```
SSD_SEND(0x01,0xCC,0x15,0x04,0x35);
```

参数 1（Parameter 1）： 0x00 DCS_Short_Write
0x01 DCS_Long_Write
0x10 Generic_Short_Write
0x11 Generic_Long_Write

参数 2（Parameter 2）：寄存器地址(Register Address)

参数 3 ～ N（Parameter 3 ～ N）：寄存器数据（Register Data)

```
DCS_Short_Write_NP(0x11);
```

参数 1（Parameter 1）：寄存器地址，无数据（Register Address, no data)

文档修订记录
Document revision history

版本 Version	日期 DATE	修改说明 Modify description	编著 Editorial
0-0	2026-02-06	初次编制 First compilation.	Liu.YL
0-1	2026-03-06	更正产品厚度尺寸 Correct the thickness	Liu.YL

－－ 结束 －－

－－ END －－